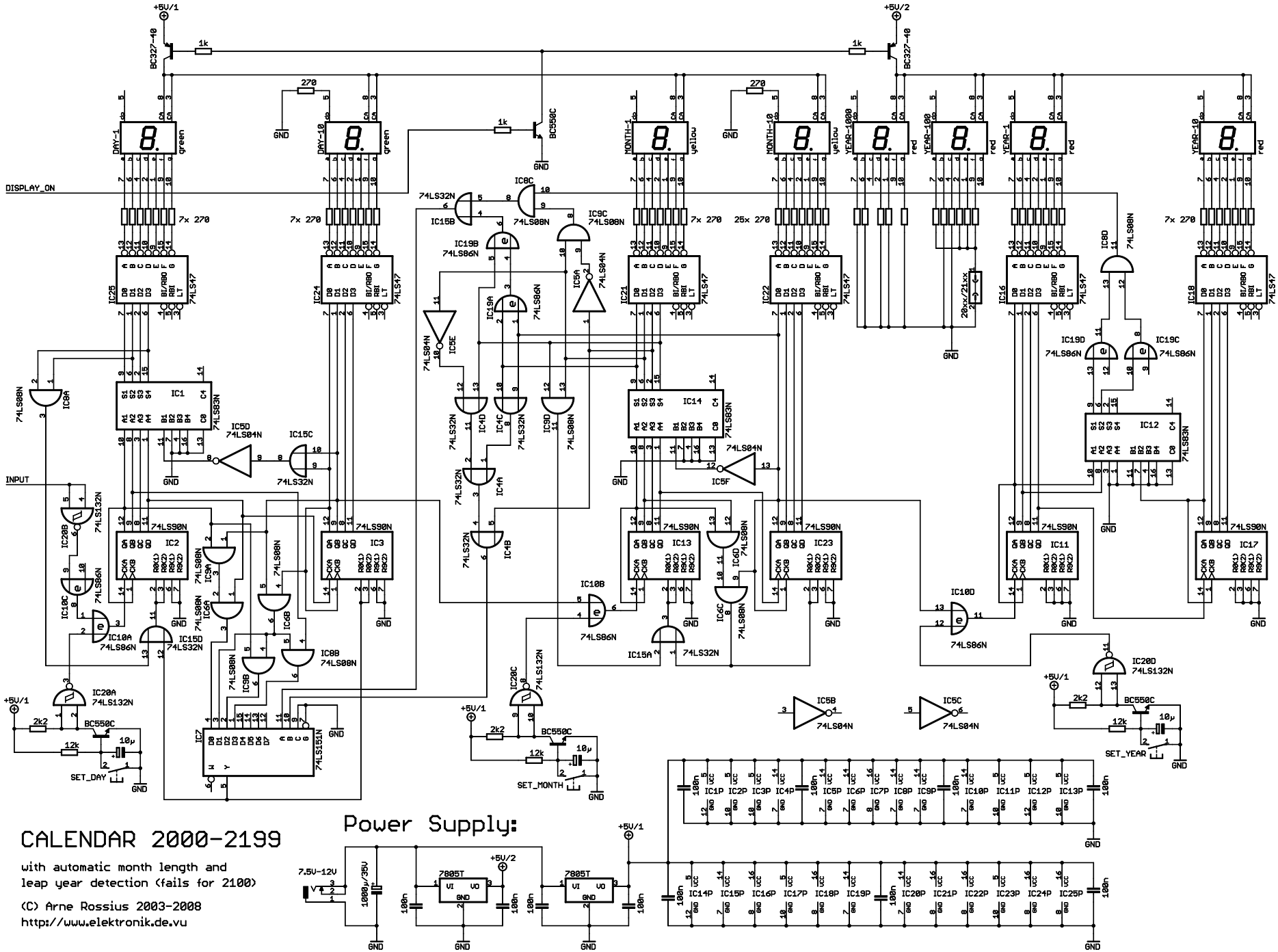

CALENDAR 2000-2199

with automatic month length and
leap year detection (fails for 2100)

(C) Arne Rossius 2003-2008
http://www.elektronik.de.vu

Power Supply: