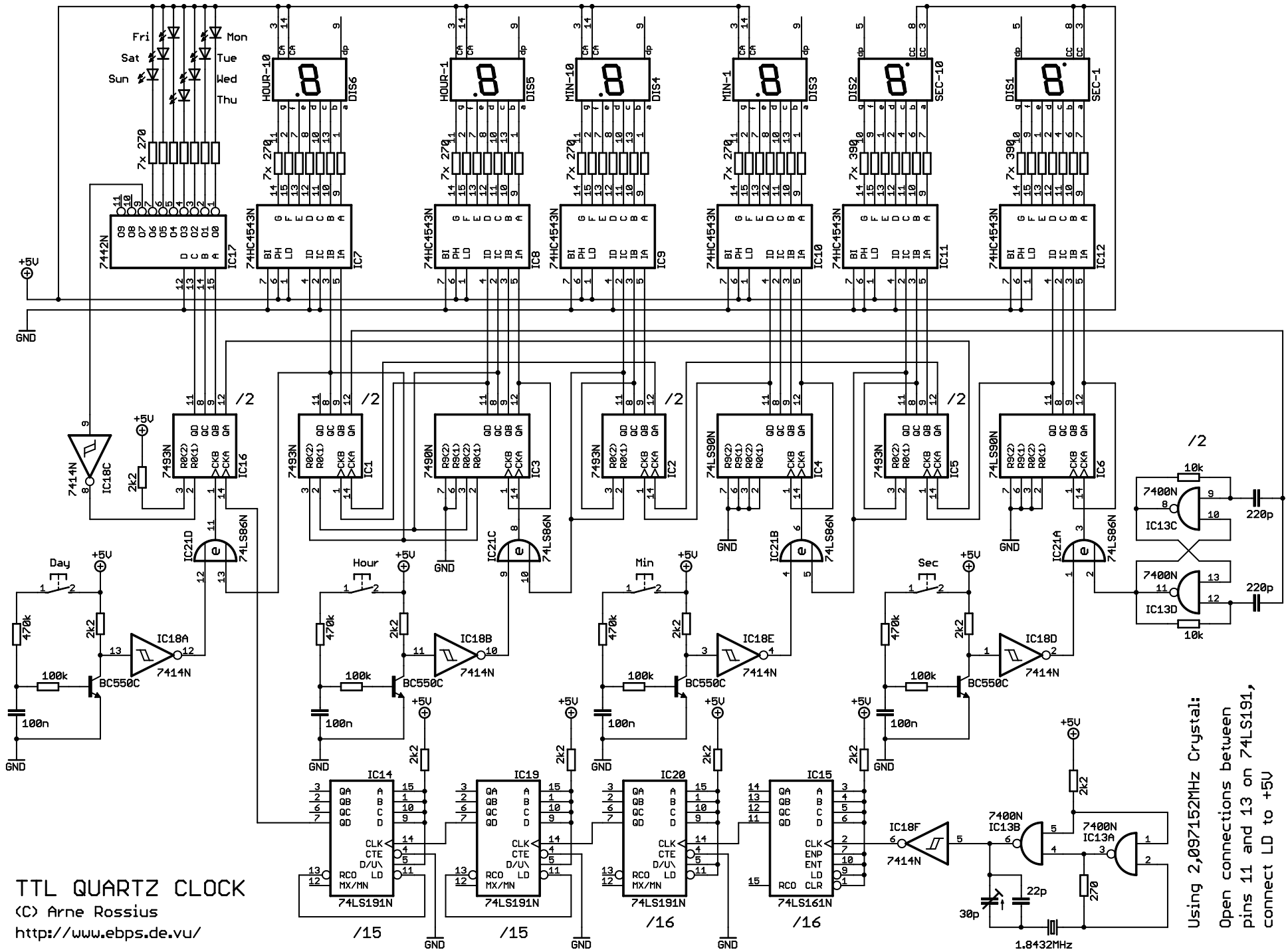
TTL QUARTZ CLOCK
(C) Arne Rossius
http://www.ebps.de.vu/
Fri
Sat
Sun
Mon
Tue
Wed
Thu
HOUR-10
HOUR-1
MIN-10
MIN-1
SEC-10
SEC-1
DIS1
DIS2
DIS3
DIS4
DIS5
DIS6
7x 270
7x 390
7442N
IC17
74HC4543N
IC7
IC8
IC9
IC10
IC11
IC12
7493N
IC16
IC1
7490N
IC3
IC2
74LS90N
IC4
IC5
IC6
7414N
IC18C
IC18A
IC18B
IC18E
IC18D
IC18F
IC21D
IC21C
IC21B
IC21A
74LS86N
Day
Hour
Min
Sec
470k
2k2
100k
100n
BC550C
IC14
IC19
IC20
IC15
74LS191N
74LS161N
/15
/16
/2
7400N
IC13C
IC13D
IC13B
IC13A
10k
220p
22p
30p
270
1.8432MHz
+5V
GND
Using 2,097152MHz Crystal:
Open connections between
pins 11 and 13 on 74LS191,
connect LD to +5V